EXPERIMENT-4.2

Implementation of full subtractor by using basic gates

OBJECTIVE:

1-To Design a full subtractor circuit by using basic gates

2- To verify the truth table of Full subtractor circuit

THEORY:

A full subtractor is a combinational circuit that performs subtraction of two bits, one is minuend and other is subtrahend, taking into account borrow of the previous adjacent lower minuend bit. This circuit has three inputs and two outputs. The three inputs A, B and C, denote the minuend, subtrahend, and previous borrow, respectively. The two outputs, Diff and Borrow represent the difference and output borrow, respectively. Implementation of Full Subtractor can be achieved by using basic gates.

BlOCK DIAGRAM

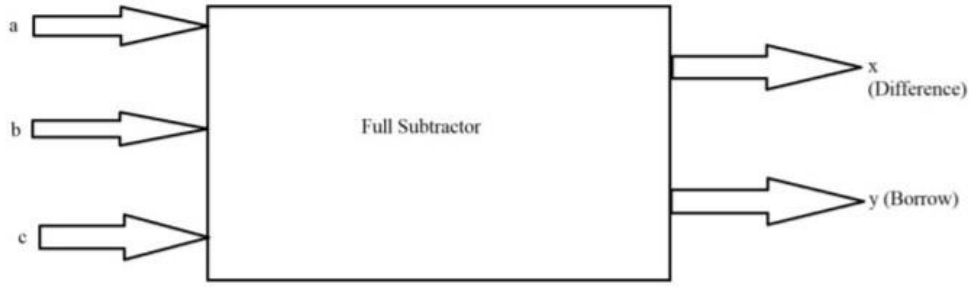

CIRCUIT DIAGRAM:

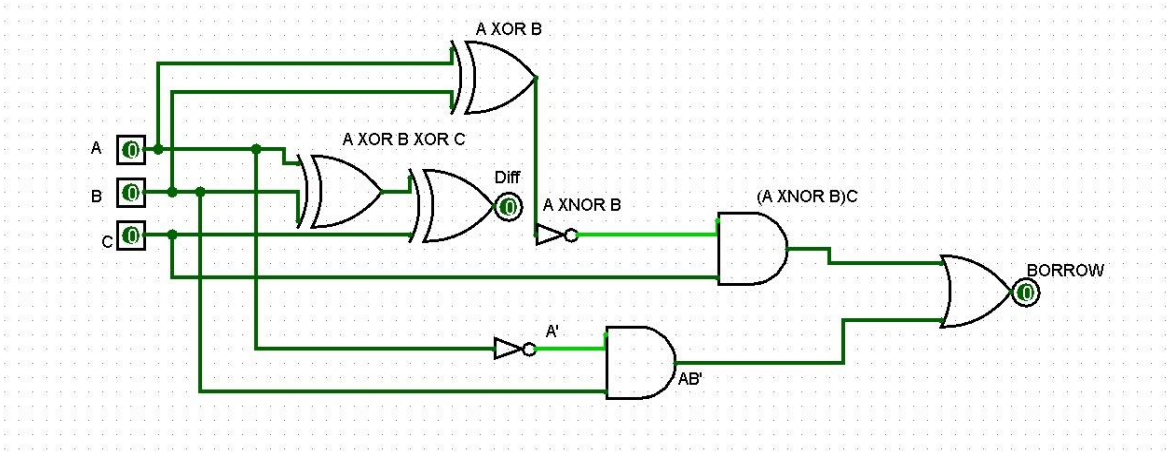

TRUTH TABLE AND EXPRESSIONS:

a	b	c	x	y
0	0	0	0	0
0	0	1	1	1
0	1	0	1	1
0	1	1	0	1
1	0	0	1	0
1	0	1	0	0
1	1	0	0	0
1	1	1	1	1

(Where x = Difference, y = Borrow)

Logical Expression

For Difference, Diff = [(A XOR B) XOR C]

$$= (A' \cdot B \cdot C' + A \cdot B' \cdot C' + A' \cdot B' \cdot C + A \cdot B \cdot C)$$

For Borrow, Borrow = [$(A' \cdot C) + (A' \cdot B) + (B \cdot C)$]

Where, (A XOR B) = $(A' \cdot B + A \cdot B')$

CONCLUSION:

From this experiment, we have learnt about Subtractor circuits, which take two binary numbers as input and subtract one binary number input from the other binary number input. Similar to adders, it gives out two outputs, difference and borrow (carry-in the case of Adder). A full subtractor is a combinational circuit that performs subtraction involving three bits, namely A (minuend), B (subtrahend), and C (borrow-in) . It accepts three inputs: A (minuend), B (subtrahend) and a C (borrow bit) and it produces two outputs: Diff (difference) and Borrow (borrow out).It has been constructed using basic logic gates in this experiment.